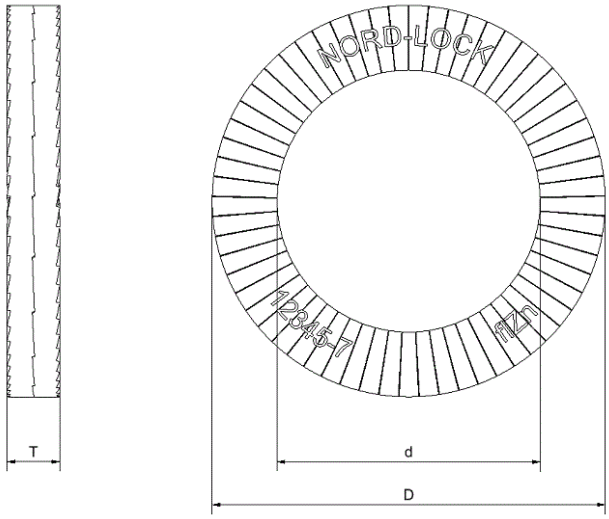


Part number

NL12

Description

Washer

| Product Attribute | Ref. | Value | Unit |
|---|---|---|---|
| Bolt size (Metric) | | M12 | |
| Bolt size (UNC) | | | |
| d (mm) | d | 13 | mm |
| D (mm) | D | 19,5 | mm |
| T (mm) | T | 2,5 | mm |
| Weight/100 pairs | | 0,29 | kg |
| d (inch) | d | 1/2" | inch |
| D (inch) | D | 3/4" | inch |
| T (inch) | T | 1/8" | inch |
| Article No. | | 1262 | |

Created: 2026-10-26 14:17:26

Address: Nord-Lock International AB

S:t Johannesgatan 1D
211 46 Malmö
Sweden

Phone: +46 40 602 46 00
Web: https://www.nord-lock.com
Email: info@nord-lock.com