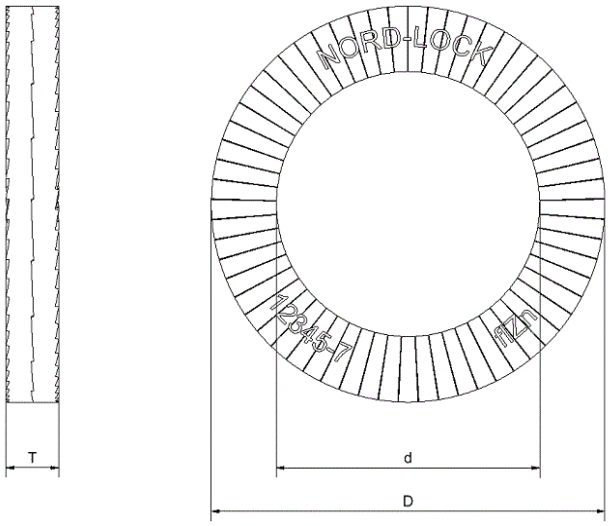

Part number

NL5

Description

Washer

Product Attribute	Ref.	Value	Unit
Bolt size (Metric)		M5	
Bolt size (UNC)		#10	
d (mm)	d	5,4	mm
D (mm)	D	9	mm
T (mm)	T	1,8	mm
Weight/100 pairs		0,05	kg
d (inch)	d	3/16"	inch
D (inch)	D	3/8"	inch
T (inch)	T	1/16"	inch
Article No.		1213	

Created: 2026-10-26 14:16:49

Address: Nord-Lock International AB

S:t Johannesgatan 1D
211 46 Malmö
Sweden

Phone: +46 40 602 46 00
Web: https://www.nord-lock.com
Email: info@nord-lock.com